ES-LF009

For Health Hazard Applications

Job Name ______ Contractor ______
Job Location ______ Approval ______
Engineer ______ Contractor's P.O. No. ______
Approval ______ Representative ______

LEAD FREE*

Series LF009

Reduced Pressure Zone Assemblies

Sizes: ¼" – 3" (8 – 80mm)

Series LF009 Reduced Pressure Zone Assemblies are designed to protect potable water supplies in accordance with national plumbing codes and water authority requirements. This series can be used in a variety of installations, including the prevention of health hazard cross-connections in piping systems or for containment at the service line entrance.The LF009 features Lead Free* construction to comply with Lead Free* installation requirements.

This series features two in-line, independent check valves, captured springs and replaceable check seats with an intermediate relief valve. Its compact modular design facilitates easy maintenance and assembly access. Sizes ¼" – 1" (8 – 25mm) shutoffs have tee handles.

LF009

Test Cock No. 3 / Ball Type Test Cocks / Test Cock No. 2 / First Check Module Assembly / R.P. Zone / Relief Valve Assembly / Test Cock No. 4 / Second Check Module Assembly / Water Outlet

Features

- Single access cover and modular check construction for ease of maintenance
- Top entry - all internals immediately accessible
- Captured springs for safe maintenance
- Internal relief valve for reduced installation clearances
- Replaceable seats for economical repair
- Lead Free* cast copper silicon alloy body construction for durability ¼" – 2" (8 – 50mm)
- Fused epoxy coated cast iron body 2½" and 3" (65 and 80mm)
- Ball valve test cocks — screwdriver slotted ¼" – 2" (8 – 50mm)
- Large body passages provides low pressure drop
- Compact, space saving design
- No special tools required for servicing

Specifications

A Reduced Pressure Zone Assembly shall be installed at each potential health hazard location to prevent backflow due to backsiphonage and/or backpressure. The assembly shall consist of an internal pressure differential relief valve located in a zone between two positive seating check modules with captured springs and silicone seat discs. Seats and seat discs shall be replaceable in both check modules and the relief valve. There shall be no threads or screws in the waterway exposed to line fluids. Service of all internal components shall be through a single access cover secured with stainless steel bolts. Body and shutoffs shall be constructed using Lead Free* cast copper silicon alloy materials. Lead Free* reduced pressure zone assembly shall comply with state codes and standards, where applicable, requiring reduced lead content.

The assembly shall also include two resilient seated isolation valves, four resilient seated test cocks and an air gap drain fitting. The assembly shall meet the requirements of: USC; ASSE Std. 1013; AWWA Std. C511; CSA B64.4. Shall be a Watts Series LF009.

Now Available
WattsBox Insulated Enclosures.
For more information, send for literature ES-WB.

NOTICE
Inquire with governing authorities for local installation requirements

NOTICE
The information contained herein is not intended to replace the full product installation and safety information available or the experience of a trained product installer. You are required to thoroughly read all installation instructions and product safety information before beginning the installation of this product.

***The wetted surface of this product contacted by consumable water contains less than 0.25% of lead by weight.**

Watts product specifications in U.S. customary units and metric are approximate and are provided for reference only. For precise measurements, please contact Watts Technical Service. Watts reserves the right to change or modify product design, construction, specifications, or materials without prior notice and without incurring any obligation to make such changes and modifications on Watts products previously or subsequently sold.

WATTS®

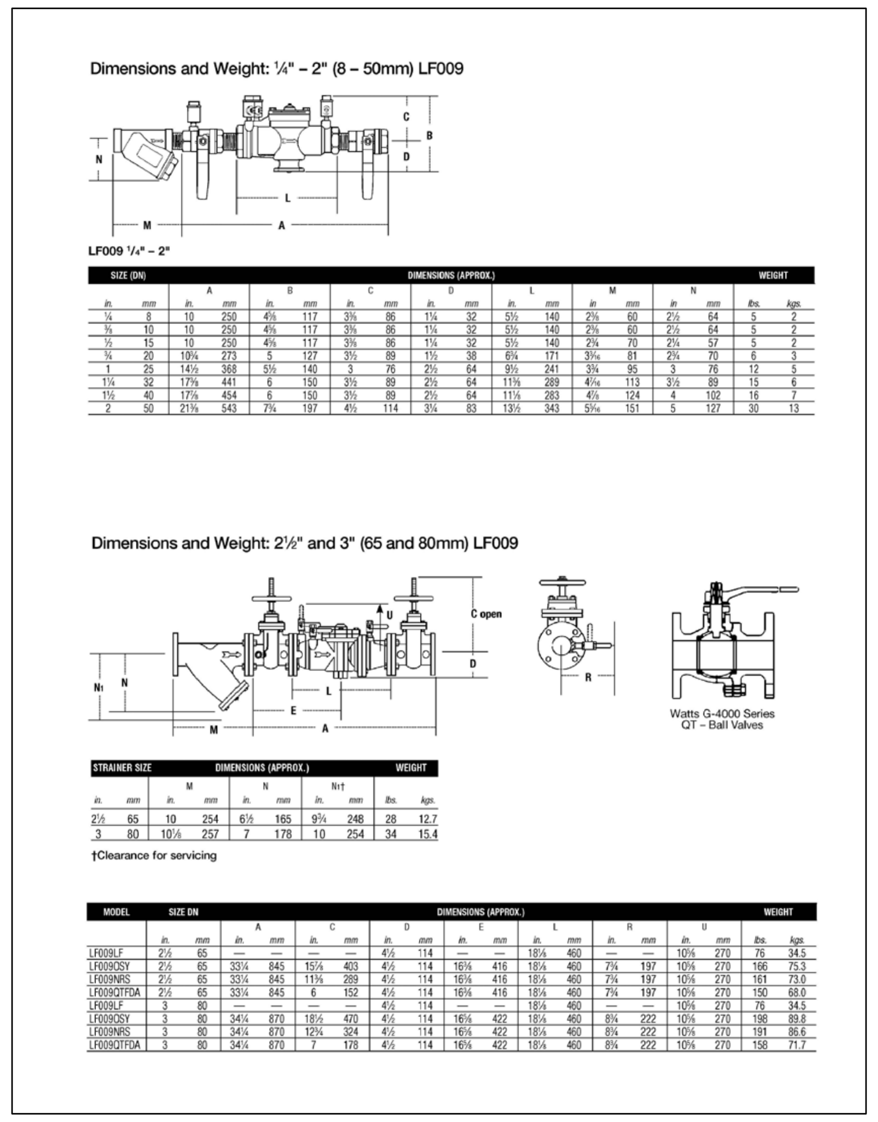

Dimensions and Weight: ¼" – 2" (8 – 50mm) LF009

LF009 ¼" – 2"

SIZE (DN)		DIMENSIONS (APPROX.)														WEIGHT	
		A		B		C		D		L		M		N			
in.	mm	in.	mm	in.	mm	in.	mm	in.	mm	in.	mm	in	mm	in	mm	lbs.	kgs.
¼	8	10	250	4⅝	117	3⅜	86	1¼	32	5½	140	2⅜	60	2½	64	5	2
⅜	10	10	250	4⅝	117	3⅜	86	1¼	32	5½	140	2⅜	60	2½	64	5	2
½	15	10	250	4⅝	117	3⅜	86	1¼	32	5½	140	2¾	70	2¼	57	5	2
¾	20	10¾	273	5	127	3½	89	1½	38	6¾	171	3 3/16	81	2¾	70	6	3
1	25	14½	368	5½	140	3	76	2½	64	9½	241	3¾	95	3	76	12	5
1¼	32	17⅜	441	6	150	3½	89	2½	64	11⅜	289	4 7/16	113	3½	89	15	6
1½	40	17⅞	454	6	150	3½	89	2½	64	11⅛	283	4⅞	124	4	102	16	7
2	50	21⅜	543	7¾	197	4½	114	3¼	83	13½	343	5 5/16	151	5	127	30	13

Dimensions and Weight: 2½" and 3" (65 and 80mm) LF009

Watts G-4000 Series QT – Ball Valves

STRAINER SIZE		DIMENSIONS (APPROX.)						WEIGHT	
		M		N		N1†			
in.	mm	in.	mm	in.	mm	in.	mm	lbs.	kgs.
2½	65	10	254	6½	165	9¾	248	28	12.7
3	80	10⅛	257	7	178	10	254	34	15.4

†Clearance for servicing

MODEL	SIZE DN		DIMENSIONS (APPROX.)														WEIGHT	
			A		C		D		E		L		R		U			
	in.	mm	in.	mm	in.	mm	in.	mm	in.	mm	in.	mm	in.	mm	in.	mm	lbs.	kgs.
LF009LF	2½	65	—	—	—	—	4½	114	—	—	18⅛	460	—	—	10⅝	270	76	34.5
LF009OSY	2½	65	33¼	845	15⅞	403	4½	114	16⅜	416	18⅛	460	7¾	197	10⅝	270	166	75.3
LF009NRS	2½	65	33¼	845	11⅜	289	4½	114	16⅜	416	18⅛	460	7¾	197	10⅝	270	161	73.0
LF009QTFDA	2½	65	33¼	845	6	152	4½	114	16⅜	416	18⅛	460	7¾	197	10⅝	270	150	68.0
LF009LF	3	80	—	—	—	—	4½	114	—	—	18⅛	460	—	—	10⅝	270	76	34.5
LF009OSY	3	80	34¼	870	18½	470	4½	114	16⅝	422	18⅛	460	8¾	222	10⅝	270	198	89.8
LF009NRS	3	80	34¼	870	12¾	324	4½	114	16⅝	422	18⅛	460	8¾	222	10⅝	270	191	86.6
LF009QTFDA	3	80	34¼	870	7	178	4½	114	16⅝	422	18⅛	460	8¾	222	10⅝	270	158	71.7

1" WATTS SERIES LF009 REDUCED PRESSURE ASSEMBLY

1" WATER METER ASSEMBLY

1" x 8" DOUBLE STRAP BRASS SADDDLE – FORD 202B–962–IP7
1" BALL VALVE CURB STOP – FORD B11–777W–NL
1" BLUE WATER SERVICE TUBING CTS SDR 9 (ENDOPURE)
1" 70 SERIES COPPERSETTER – 18" HEIGHT – FORD VBHH77–18HB–11–77–NL
CARSON PLASTIC METER ENCLOSURE – 18" DEPTH – FLUSH LID

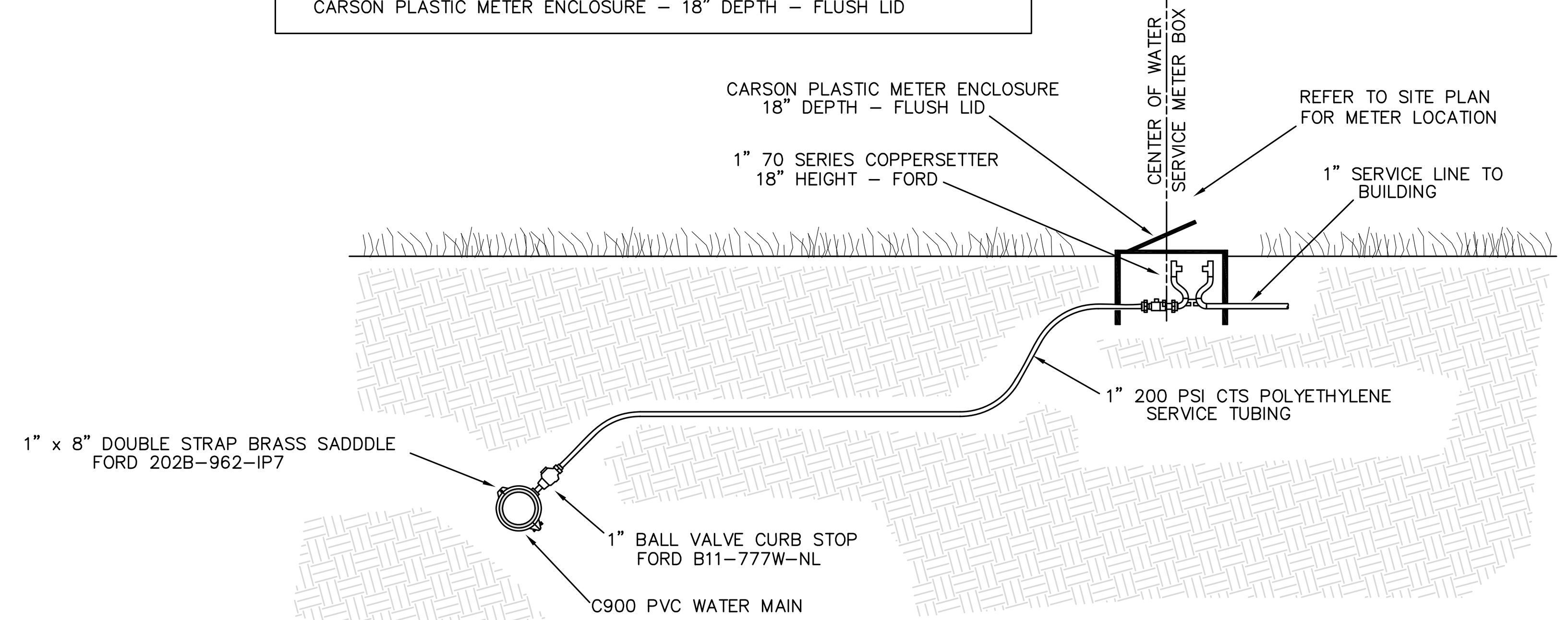

1" WATER SERVICE CONNECTION DETAIL

NOT TO SCALE

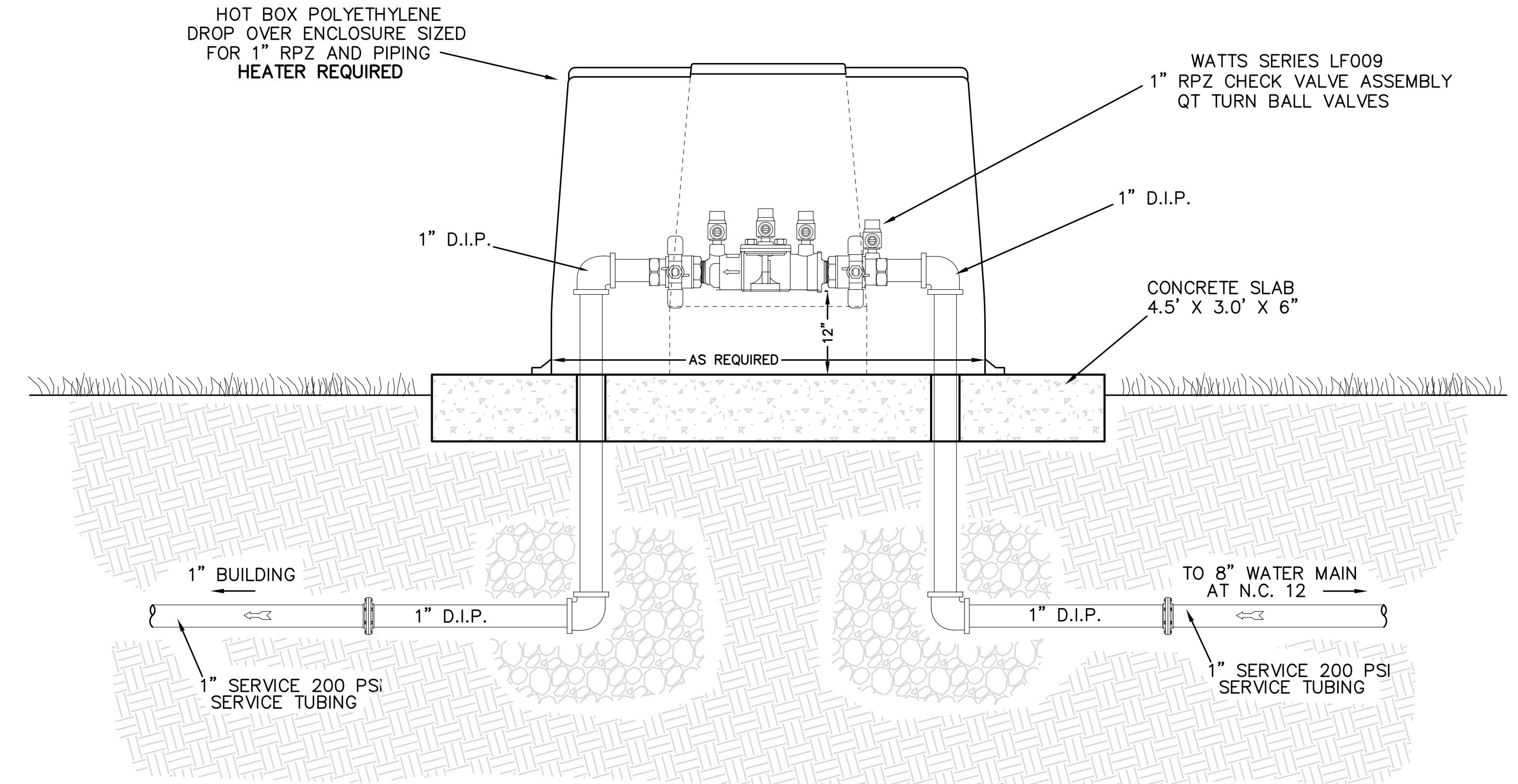

1" BACK FLOW PREVENTION

NOT TO SCALE

KILL DEVIL HILLS TESTING STANDARDS

TEST AND CLEANUP
Section A.1.Testing and inspections.

(a) The Town shall monitor all testing and inspect all lines as construction progresses. All testing shall be completed before connecting to existing water lines. The Contractor or developer shall notify the Town twenty–four (24) hours in advance when he/she will be ready for inspection and testing and shall pretest before notifying the Town.

(b) After the pipe has been laid and backfilled as specified, all newly laid pipe, or any valve section thereof; shall be subjected to a pressure of not less than one hundred fifty (150) psi. Air or air–water methods of applying pressure are prohibited. The duration of the pressure test shall be at least four (4) hours, for which time the Contractor shall fill the line slowly, expelling air at the high points, and bring it up to required pressure.

(c) The only lines not required to be pressure tested are short (not longer than 25' unless approved by the Engineer) connection sections used to tie new mains into existing lines.

(d) The Town shall inspect the entire line and appurtenances for leaks and movement. Any leaks or defects shall be repaired and the test repeated until acceptable.

(e) A leakage lest shall be conducted after a pressure test has been satisfactorily completed. The average pressure range shall be one hundred fifty (150) psi and be held for four (4) hours, provided that the Engineer may, at his discretion, allow this time to be reduced to (2) hours. The lines shall be filled as for the pressure test or the Contractor shall continue to maintain the pressure from the test. A source of makeup water shall be provided that can be measured. The test will be made to determine the leakage, or the amount of water required to maintain test pressure.

(f) The allowable leakage is less than the value computed by the formula:

$$L = \frac{ND\sqrt{P}}{7{,}400}$$

L = ALLOWABE LEAKAGE IN GALLONS PER HOUR
N = NUMBER OF JOINTS IN LENGTH OF PIPE TESTED
D = NOMINAL DIAMETER OF PIPE (INCHES)
P = AVERAGE TEST PRESSURE IN PSIG

Should any test of pipe disclose leakage greater than that specified above, the Contractor shall locate and repair defective joints until the leakage is within the specified allowance.

(g) The Contractor shall maintain pressure on the line and close each valve progressively, starting from the far end of the system and vent extreme ends of the line. Allowable pressure drop shall be less than ten (10) psi in five (5) minutes with test pump off

KILL DEVIL HILLS VALVE AND VALVE BOX STANDARDS

Section A.1.Valves.

(a) Resilient wedge gate valves. All resilient wedge gate valves shall conform in all respects to latest AWWA Specification C500 and shall be American Flow Control, Mueller "O" ring or M&H, or approved equal. Resilient wedge gate valves shall be vertical, shall open counterclockwise, and shall be of the non–rising stem type with mechanical joint ends and two (2) inch square operating nut. Resilient wedge valves shall be iron body, double disc, parallel seat, fully bronze mounted. Resilient wedge valves shall be designed for a working pressure of two hundred (200) psi

(c) Valve boxes. Valve boxes shall have the following characteristics:
(1) Valve boxes shall be of close–grained, gray cast iron, in three (3) pieces consisting of
(a) a lower base piece which shall be flanged at the bottom to fit around the stuffing gland and rest on the valve bonnet.
(b) an upper part which shall also be flanged on the lower end, of such size so as to telescope over the lower part and the upper end being constructed in the form of a socket to receive the cover.
(c) The centerpiece shall be minimum five (5) inches inside diameter.
(2) The valve box shall be Dewey Brothers, Inc., VBX–TE–3B or approved equal.
(3) The cover shall have cast on the upper surface in raised letters the word "WATER." Valve boxes shall be painted prior to shipment with a coat of protective asphaltum paint and contain a cement collar.

KILL DEVIL HILLS WATERLINE MATERIAL STANDARDS

PART A. MATERIALS

Section C.1. Generally.
All water system and water line materials used shall conform to the specifications set out in this division and any changes shall be submitted in writing to and approved by the Town.

Section C.2. Pipe standards.

(a) PVC: Except for 2" diameter pipe, PVC pipe shall conform to all requirements of AWWA Specification C900, latest edition, and AWWA C905, latest edition, for sizes larger than 12". PVC pipe and fittings shall be pressure rated at one hundred fifty (150) psi (pounds per square inch) with a standard dimension ratio (SDR) of eighteen (18) for both barrel and bell dimensions. 2" diameter pipe shall comply with ASTN standard D2241, SDR 21. Pipe shall bear the National Sanitation Foundation seal of approval and shall comply with the requirements for Type 1, Grade I (PVC 1120) of the ASTM resin Specification D–1784.
(1) Joints. PVC pipe shall have push–on joints, incorporating a rubber ring bell joint which shall be an integral and homogeneous part of the pipe barrel. Solvent–welded joints shall not be used.
(2) Fittings shall be the same as for ductile iron pipe as set forth below.

(b) Ductile Iron: Ductile Iron Pipe shall be furnished in 18 or 20 foot laying lengths, with push–on type joints, except where mechanical joint or pipe is called for on the Drawings. Ductile iron pipe shall conform to the requirements of AWWA C151. Flanged ductile iron pipe shall comply with the requirements of AWWA C115.
(1) Thickness Class of the pipe shall be Pressure Class 350 as required by the pipe size, bedding type and depth. The pipe shall be round and gaged throughout its entire length. Ungaged pipe will not be accepted.
(2) Lining – All pipe shall be single coat cement lined and sealed coated in accordance with AWWA C104.
(3) Joints shall be either mechanical, push on, or flanged conforming to AWWA C111 (ANSI A21.11) or AWWA C115 (ANSI A21.15) as applicable. All flanges and glands for pipes and fittings shall be made of ductile iron.
(4) Fittings shall be manufactured in accordance with AWWA C110 (ANSI A21.10) or AWWA C153 (ANSI A21.53), and shall be ductile iron. The minimum acceptable pressure rating shall be 350 psi. All fittings shall be lined in the same manner as ductile iron pipe.
(5) Coating shall be provided on the exterior of all ductile iron pipe, joints and fittings as required by AWWA C110, C111, C115, C151, or C153 as applicable. All pipes, joints and fittings shall be examined before and after laying to determine if the coating has been damaged. Any damaged areas and all joints shall be coated with approximately 1 mil of a bituminous coating, such as Koppers No. 50 or Intertol No. 49.
(6) Polyethylene Wrap, where indicated on Drawings, shall conform to the requirements of AWWA C105.
(7) Retainer Glands, or other joint restraint devices, shall be cast from high strength ductile iron. Restraint devices shall be rated to perform their restraining function at the full rated pressure of the pipe itself. Devices used on mechanical joint pipe shall be compatible with mechanical joint connectors meeting requirements of AWWA C111. Acceptable types:
(a) For PVC pipe, Uniflange Series 1300 or EBAA Iron Sales, Inc., Series 500 or 1500;
(b) Ductile Iron Pipe shall include a restraining mechanism which, when actuated, imparts multiple wedging action against the pipe, increasing its resistance as the pressure increases. The gland shall be compatible with mechanical joints meeting the requirements of AWWA C111. Acceptable types shall be Mega–Lug, Series 1100 for mechanical joint pipe and Series 1700 for push–on joint pipe.

ALL WATER LINE MATERIALS, INSTALLATION, TESTING AND DISINFECTION SHALL COMPLY WITH THE TOWN OF KILL DEVIL HILLS STANDARD SPECIFICATIONS. SUBMITTALS REQUIRED FOR ALL MATERIALS WITH WRITTEN APPROVAL BY ENGINEER AND TOWN OF KILL DEVIL HILLS IS REQUIRED

MICHAEL W. ROBINSON, P.E., P.L.S.
ENGINEERING AND SURVEYING
P.O. BOX 2852
KILL DEVIL HILLS, NC 27948
PHONE: 252–255–8026
EMAIL: mrobinson@obxengineering.com

PRELIMINARY REVIEW
OCEANFRONT AMENITY REVISIONS

NORTH CAROLINA PROFESSIONAL SEAL ENGINEER MICHAEL W. ROBINSON 04-05-19

REVISIONS			
NO.	DATE	DESCRIPTION	BY

PROJECT: *FIRST FLIGHT HOTEL, LLC*
KILL DEVIL HILLS *DARE COUNTY* *NORTH CAROLINA*

GENERAL DETAILS

DATE: 04–05–19	SCALE: NONE
DESIGNED: MWR	DRAWN: MWR
SHEET: 6 OF 8	
CAD FILE:	
PROJECT NO: 052916	